RBC PROPRIETARY AND CONFIDENTIAL INFORMATION
This document is the property of REGAL BELOIT CORPORATION ("RBC") including its subsidiaries and divisions and contains proprietary information of RBC. This document is loaned on the express condition that neither it nor the information contained therein shall be disclosed to others without the express written consent of RBC, and that the information shall be used by the recipient only as approved expressly by RBC. This document shall be returned to RBC upon its request. This document may be subject to certain restrictions under U.S. export control laws and regulations.

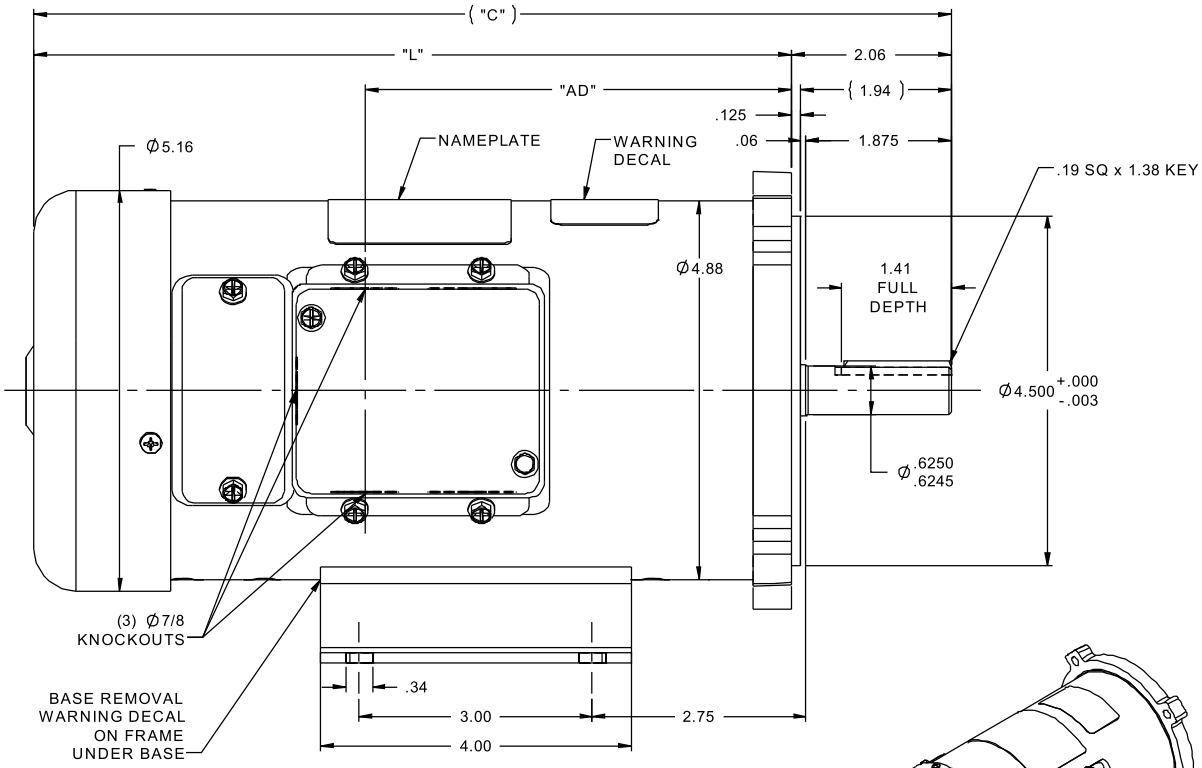

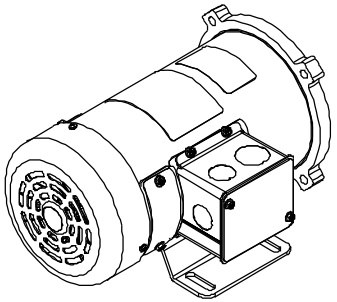

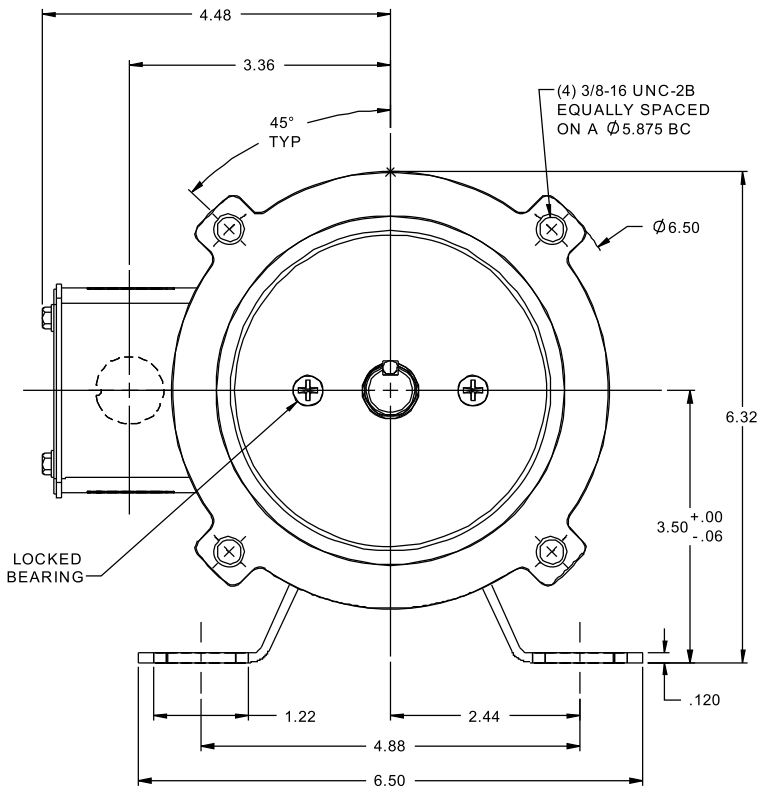

CATALOG No.	"C"	"L"	"AD"	VOLTS	H.P.	RPM
098382.00	10.81	8.75	4.49	48	1/2	1800
098381.00	10.81	8.75	4.49	36	1/2	1800
098069.00	13.81	11.75	7.49	180	3/4	1750
098032.00	13.81	11.75	7.49	90	3/4	1750
098010.00	11.81	9.75	5.49	180	3/4	2500
098009.00	11.81	9.75	5.49	90	3/4	2500
098008.00	11.81	9.75	5.49	180	1/2	1750
098007.00	10.81	8.75	4.49	180	1/2	2500
098006.00	10.81	8.75	4.49	90	1/2	2500
098005.00	11.31	9.25	4.99	180	1/3	1750
098004.00	11.31	9.25	4.99	90	1/3	1750
098003.00	11.31	9.25	4.99	180	1/4	1750
098002.00	10.81	8.75	4.49	90	1/4	1750
098000.00	11.81	9.75	5.49	90	1/2	1750

NOTES:
1) MAXIMUM FACE RUNOUT .004 T.I.R.
2) MAXIMUM PILOT ECCENTRICITY .004 T.I.R.
3) PERMISSIBLE SHAFT RUNOUT .002 T.I.R.
4) GASKETS THROUGHOUT.

NO	REVISION	BY & DATE	CHK
08	REDRAWN IN SOLIDWORKS, MODIFIED TABLE PER NEW STANDARD	IPG 9/8/2011	
07	ADDED FAN GUARD HOLE PLUG, ISAAC 10-4174	IPG 10/11/10	

TOLERANCES UNLESS SPECIFIED

DEC	INCHES
X	±.1
XX	±.03
XXX	±.005
XXXX	±.0005
ANG	±1/2°

LEESON ELECTRIC MOTORS GEARMOTORS AND DRIVES

TITLE OUTLINE
42 FRAME DC - SS56C MOUNT

MAT'L
FINISH

THIRD ANGLE PROJECTION

RFP
PREV
NETWORK FILE NAME 027620

DRAWN	JRA 5/11/95
CHK	
APPR	
SCALE	5:8
REF	RDOUT42DC8
FMF	C42D17FK1
PAGE	OF
SIZE	B
DRAWING NO	027620
REV	08

4/23/2013 2:15:03 PM - Converted by Connexus