NAMUR VALVES

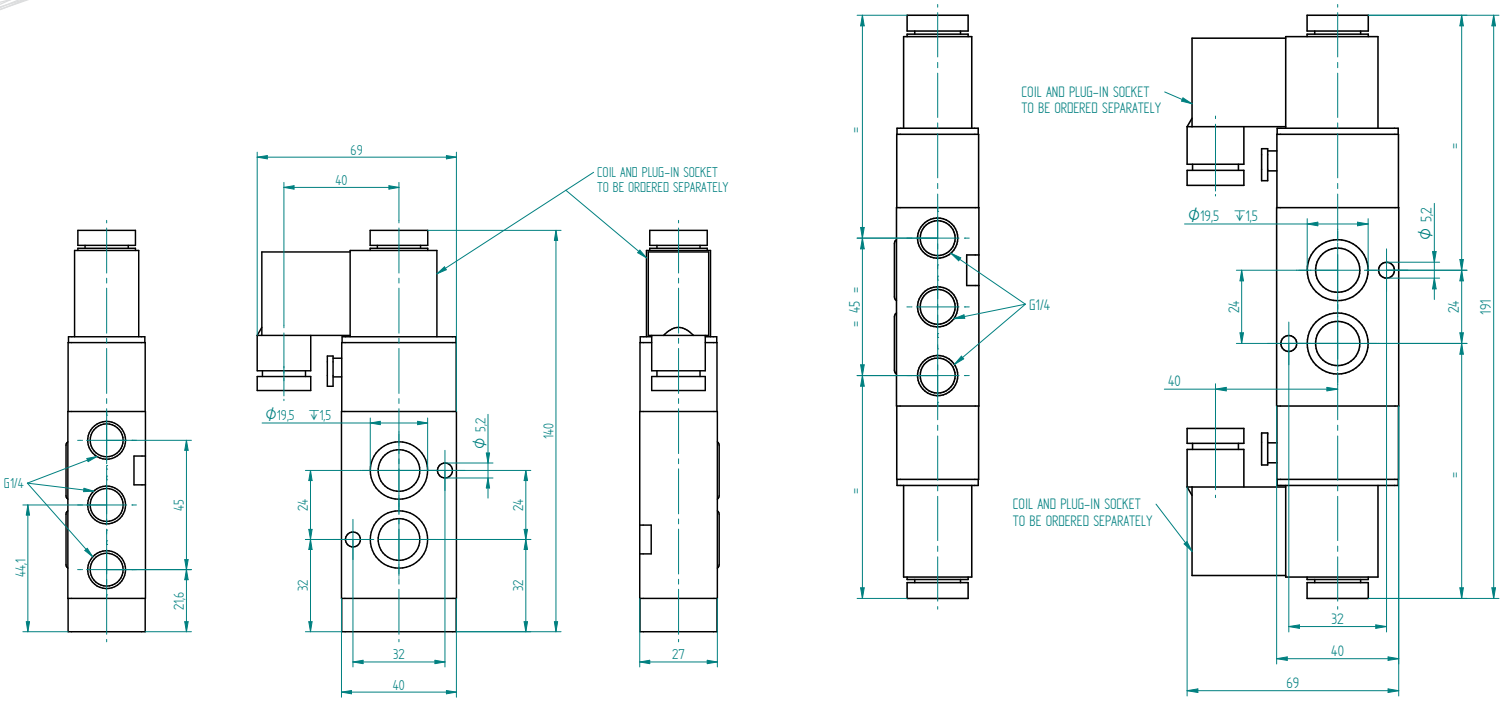

General information

Code	Function	Pressure range	Actuation	Return	Port size (kv coeff.)	Coil type
76.073.91.00C	5/2 spool valve	1.5 - 7 bar	Solenoid	Spring (pressure supported)	G1/4 (24 l/min)	76.410.xx.xx (order separately)
76.073.92.00C	5/2 spool valve	1.5 - 7 bar	Solenoid	Solenoid	G1/4 (24 l/min)	76.410.xx.xx (order separately)
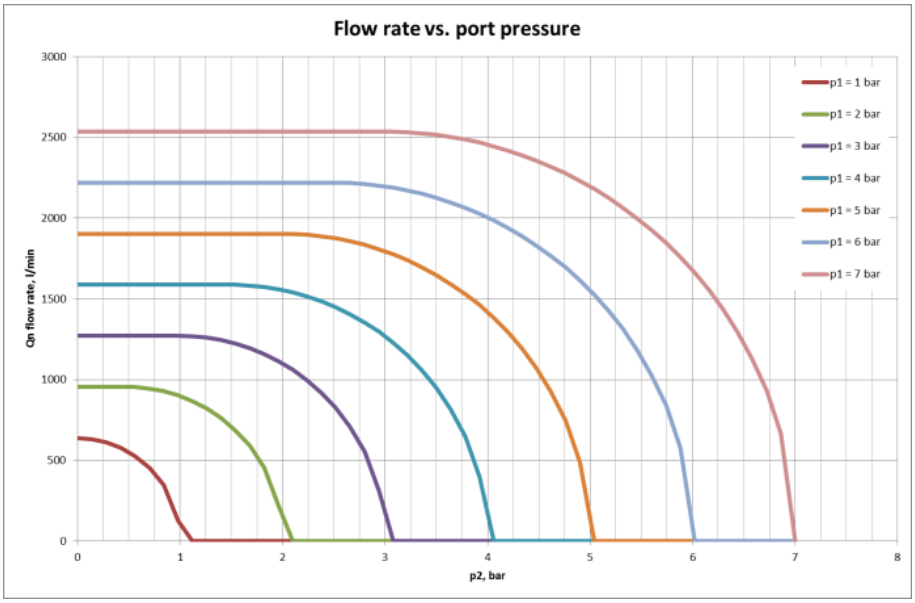
Operating medium	40 micron filtered, lubricated (or not) compressed air
Lubrication	Not required
Temperature range	-20 °C / +70 °C
Voltage range	-15% / +10%
Insulation class	F (155 °C)
Electr. connection	3 spade connectors (6.3 x 0.8 DIN 46247) for plug in socket (order separately) - Type B
Max actuation freq.	5 Hz
Seals	NBR
Housing	Aluminum alloy